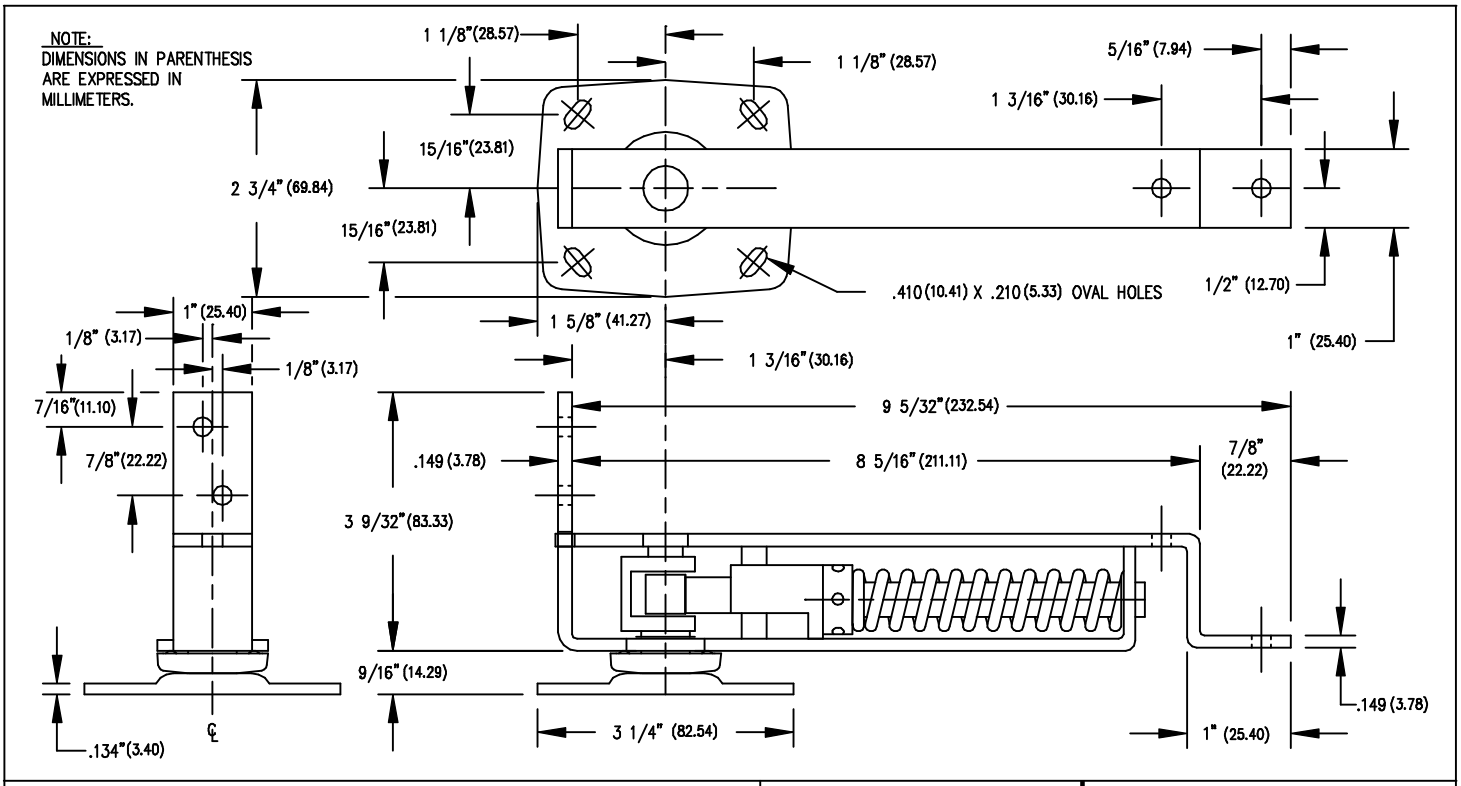

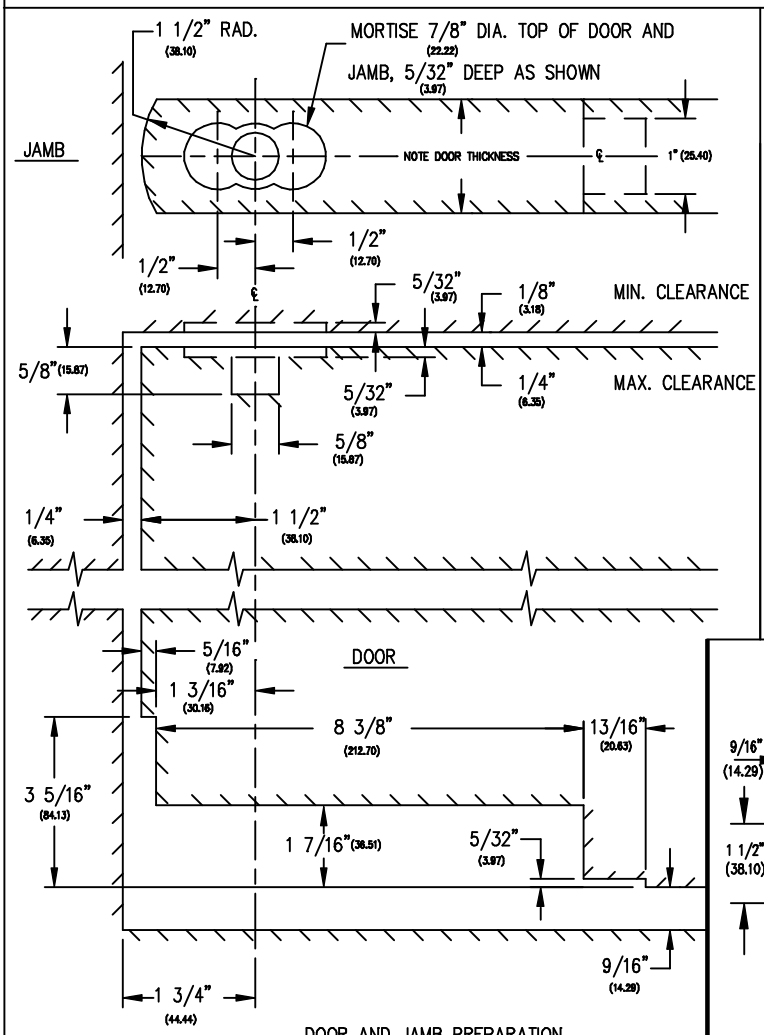

DOOR AND JAMB PREPARATION

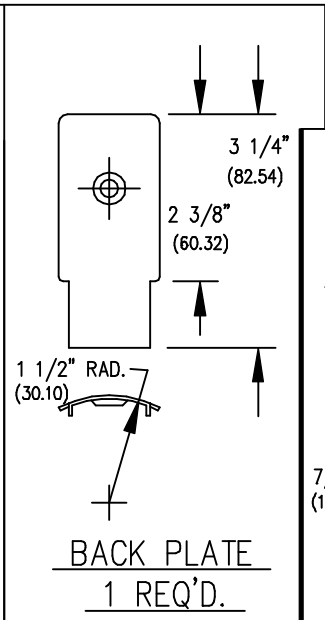

BACK PLATE
1 REQ'D.

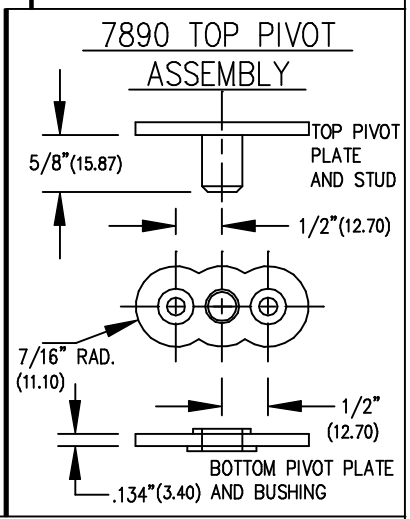

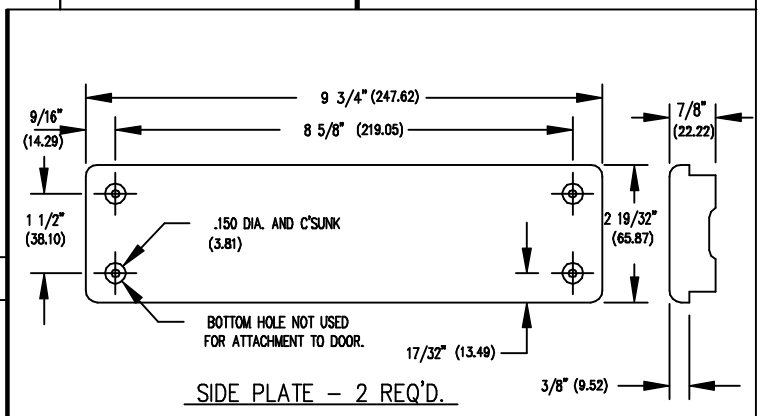

SIDE PLATE – 2 REQ'D.

ITEM	SCREWS
FRAME	(4) #10 X 1 1/4" P.H.W.S
FLOOR PLATE	(4) #10 X 1 1/4" P.H.W.S
SIDE PLATE	(6) #6 X 3/4" F.H.W.S
BACK PLATE	(1) #10-24 X 1/2" F.H.M.S
TOP PIVOT	(4) #10 X 1" F.H.W.S

----NOTE----
DOOR THICKNESS
1 3/8" TO 1 3/4"

BOMMER IND. INC. LANDRUM, S.C.

TYPE : HORIZONTAL SPRING PIVOT DOUBLE ACTING

PART NO.: 7811 AND 7821

Drawn by : JACKSON	DATE	SCALE	DRAWING NUMBER
Appoved by :	15 MAY 98	N.T.S.	7811TEMP